ROUND 1 - Thursday, October 6, 2022

SHOTLINK

Shriners Children's Open

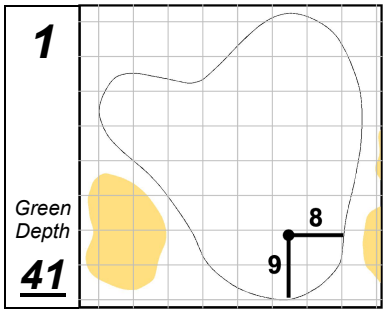

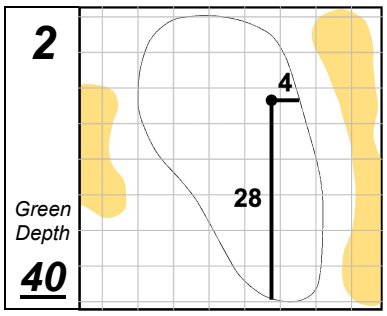

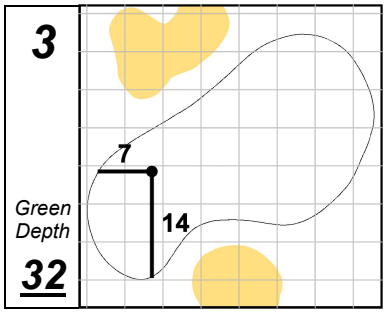

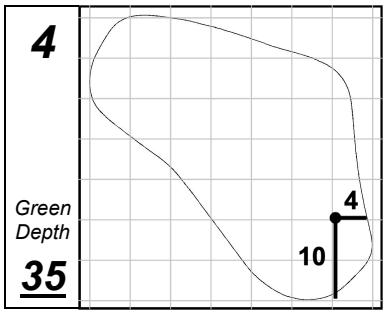

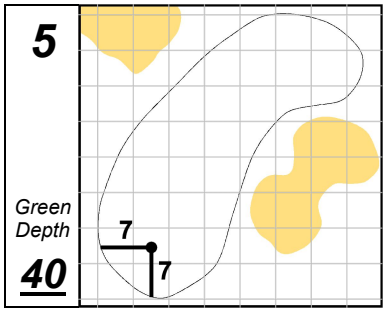

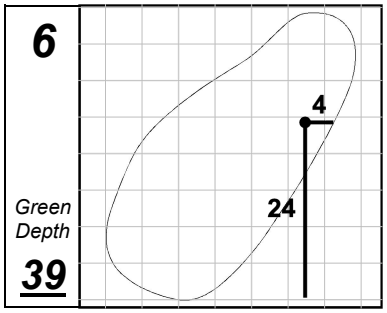

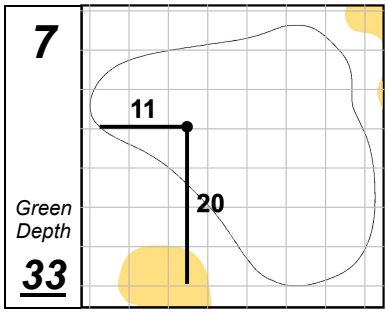

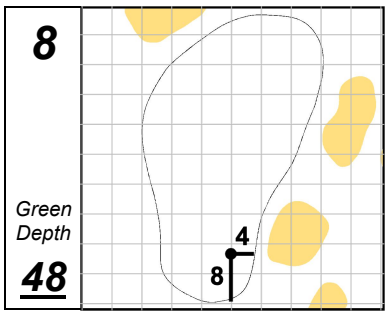

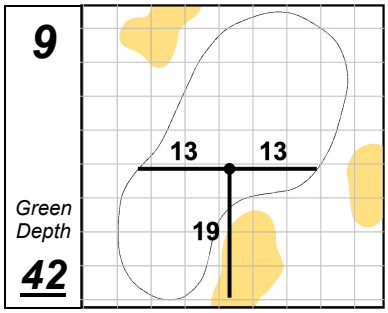

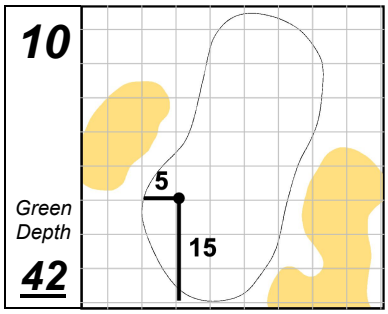

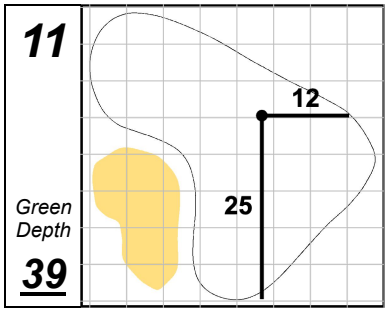

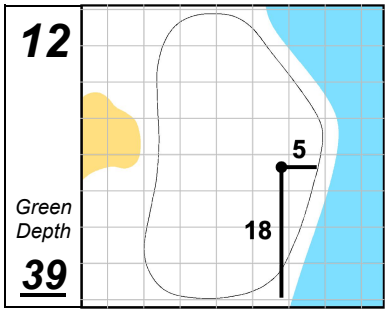

TPC Summerlin

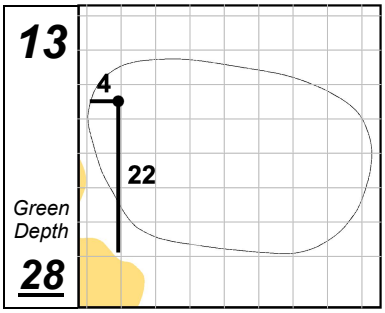

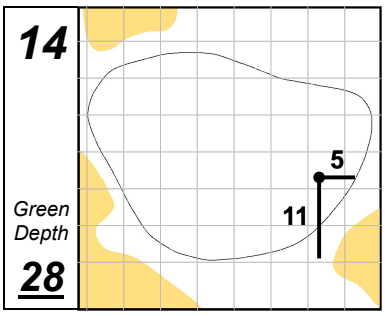

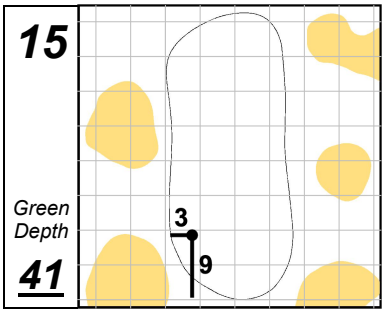

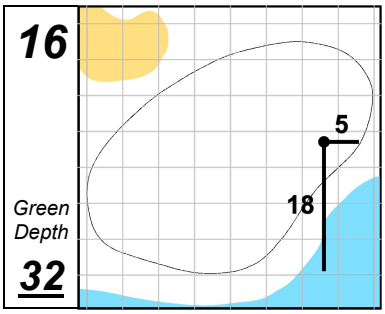

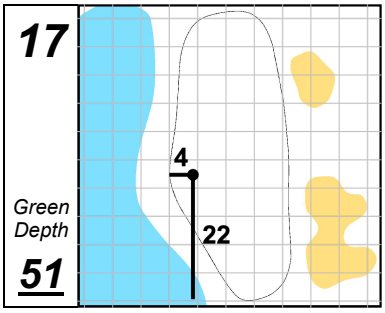

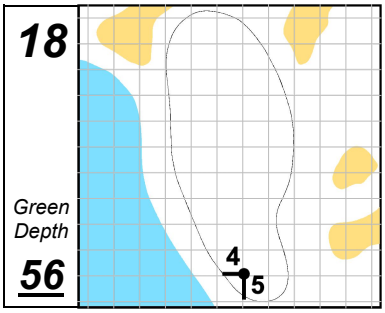

Each side of a complete square on the green represents 5 YARDS.

Wednesday, October 5, 2022 8:17:00 AM